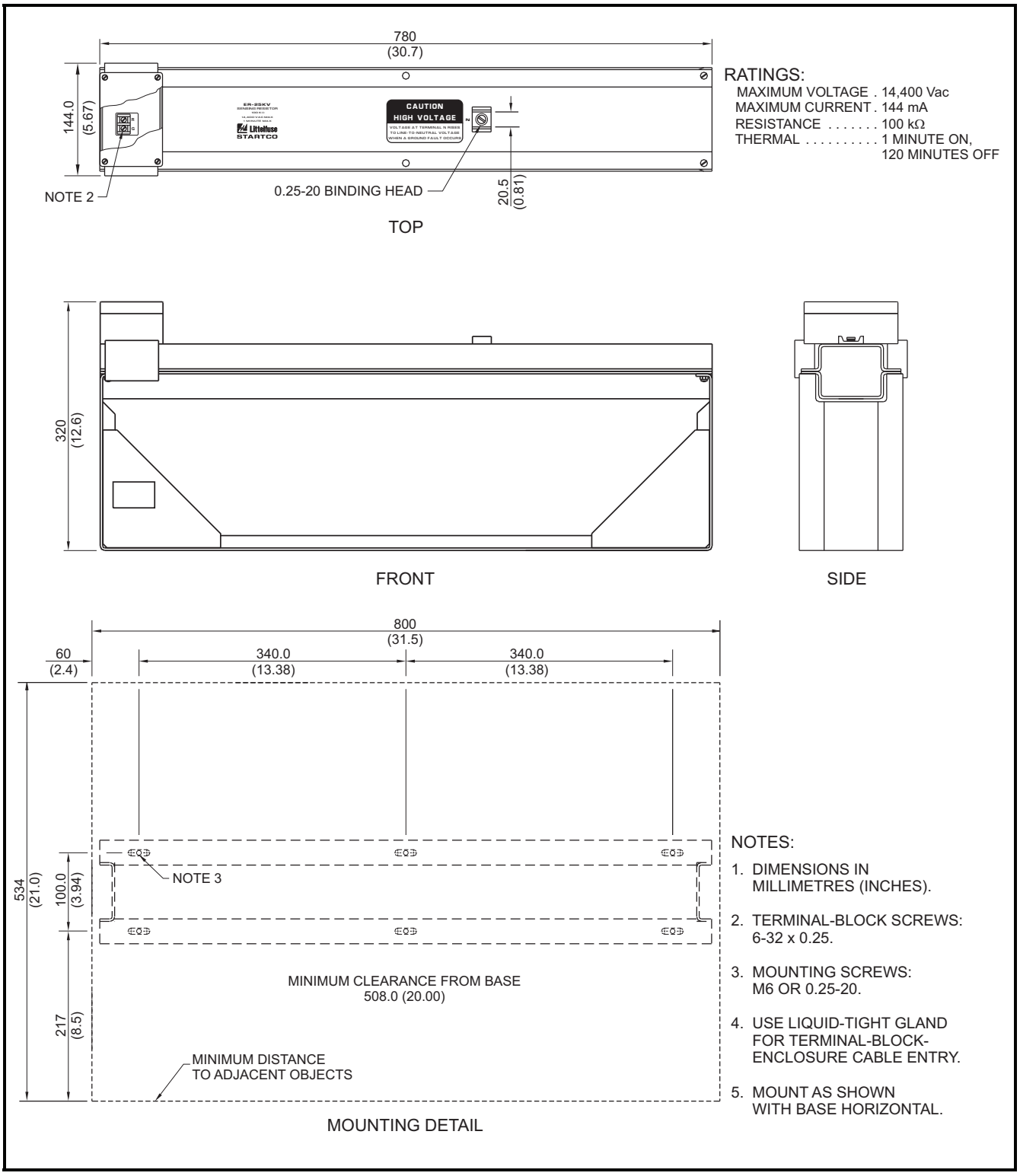

FIGURE 9. ER-25KV Sensing Resistor.